CONNECTORS

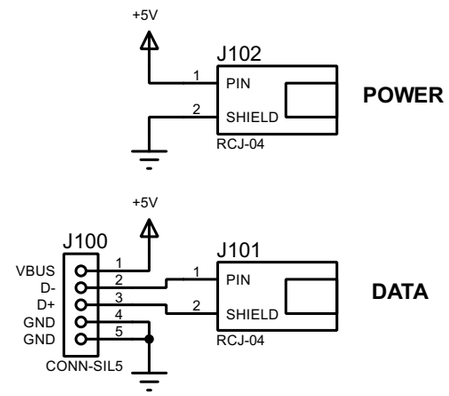

MOUNTING HOLES

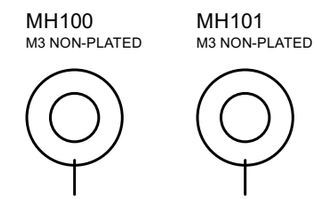

Symbol Key

* OPTIONAL
# OTHER VARIANTS MAY BE USED
& SOT
^ MAY BE REPLACED WITH 0R LINK
! CRITICAL COMPONENT

Internal Drawing. No Modifications Permitted Without Reference To The Relevent Person.

COMMENTS PLEASE SEE PROJECT NOTES FOR REVISION HISTORY	SHEET TITLE: USB TO RCA	don ELECTRONICS	PROJECT TITLE: OPTICAL DJ - MAIN PCB (Schematic Only)	REVISION: 1
			SCHEMATIC REF: DE8194-2-002-X	FILE NAME: DE8194-7-002-X (OPTICAL DJ - USB TO RCA PCB CAD PROJECT).pdsprj
	SHEET: 1 of 1		DESIGNED: JM / CHECKED: TBC / APPROVED: TBC	DATE CREATED: 15/02/2024 / BLANK